NEUP Nuclear Energy University Programs
U.S. Department of Energy

July 27-28, 2010

FY2011 NEUP Workshop Power Conversion Breakout Session

Jim Sienicki

Rockville, Maryland

Power Conversion Systems (PCS)

- Advanced Energy Conversion (PCS-20)
  - Program: Advanced Reactor Concepts (ACS)
- Development of new advanced energy conversion systems that use advanced technologies or innovative engineering is sought and should be viable for commercial deployment by as early as 2030, but no later than 2040. The scope of the proposed project should include a thorough viability assessment of the advanced energy conversion system, a detailed technology gap analysis, and a comprehensive technology development roadmap. The goals of the advanced energy conversion system should be to provide electricity at the same cost or lower than light water reactors steam plants with improved performance.

Power Conversion Systems (PCS)

- Development of new advanced energy products for advanced reactor applications is being sought. These advanced energy products could be existing products produced by fossil and other conventional energy sources or new out-of-the-box products. The scope of the proposed project should include a thorough assessment of the advanced energy product, a comparison of producing this advanced energy product with conventional technology and advanced reactor technology, an impact assessment on the chosen reactor technology, a detailed technology gap analysis, a comprehensive technology development roadmap, and an assessment of the implications of coupling the production of this advanced energy product to an advanced reactor system. Development of approaches to coupling of the heat source with the wide variety of process heat applications (cogeneration, coal-to-liquids, chemical feedstocks) is sought with an emphasis on novel approaches that can greatly improve the ease of coupling, the operability of the combined system, and the ultimate economics.

Other Relevant Workscopes, Breakout Sessions, and Programs

- Supercritical CO_2 Processes (MS-2)
  - Breakout Session: Modeling and Simulation (MS)
  - Program: Advanced Reactor Concepts (ARC)
- Hydrogen Generation (M-7)
  - Breakout Session: Materials (M)
  - Program: Next Generation Nuclear Plant (NGNP)
- Helical Coil Steam Generator for SMR (RD-10) and
- Integral Testing Platform (RD-11)
  - Breakout Session: Reactor Design (RD)
  - Program: Small Modular Reactor (SMR)
- Advanced Reactor Designs (RD-12)
  - Breakout Session: Reactor Design (RD)
  - Program: Advanced Reactor Concepts (ARC)

Advanced Energy Conversion

- The Rankine steam cycle has traditionally been utilized for converting the thermal energy released in the reactor core into electricity delivered to the electrical power grid
- Advanced energy conversion involves R&D into energy conversion approaches that offer capital cost, safety, and efficiency benefits beyond the current Rankine steam cycle
- Current focus is upon the supercritical carbon dioxide (S-CO_2) Brayton cycle
- S-CO_2 Brayton cycle is under development for application to SFR, LFR, and VHTR systems

Advanced Energy Conversion
S-CO_2 Brayton Cycle

- S-CO_2 Brayton cycle coupled to SSTAR small Lead-Cooled Fast Reactor concept - 44 % efficiency for core outlet temperature of 567 °C

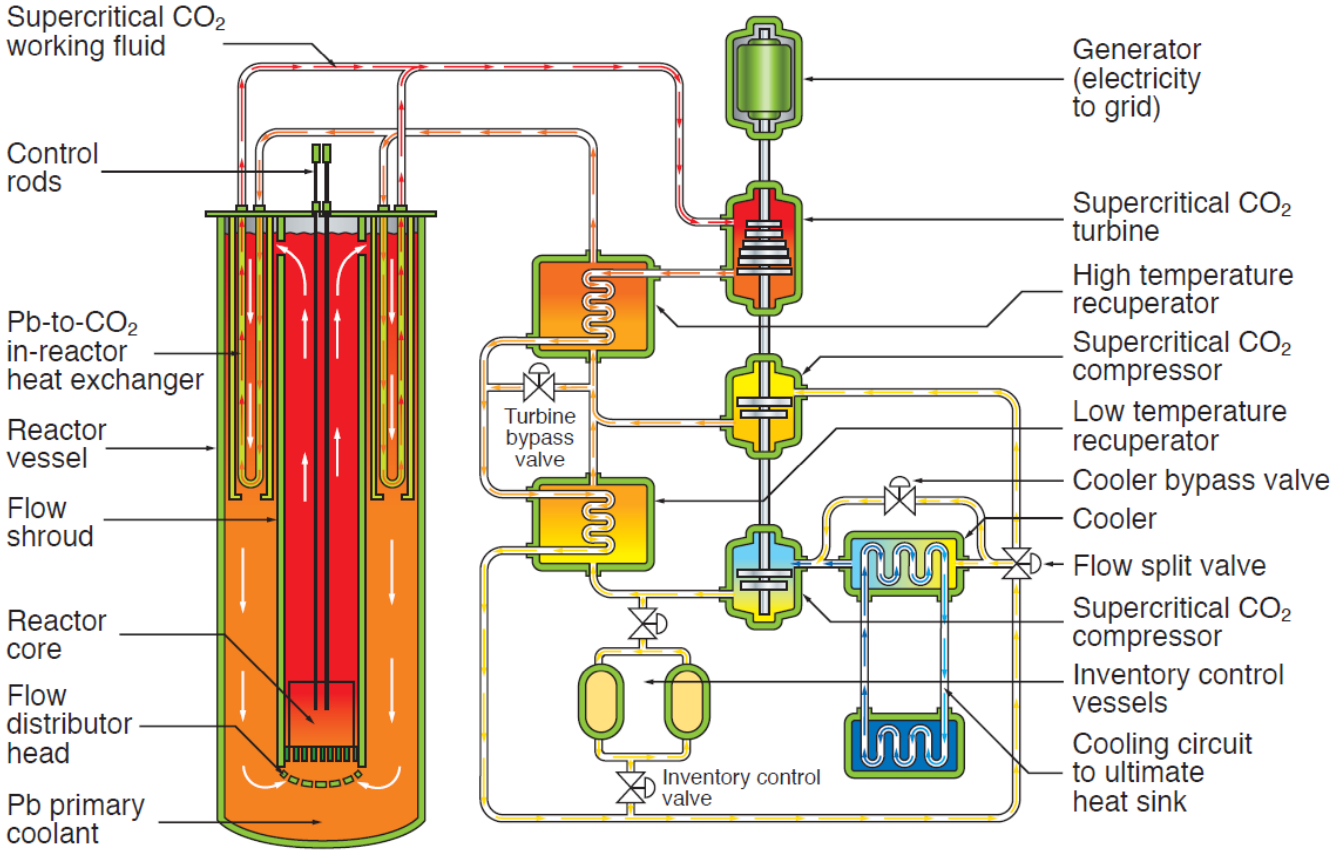

S-CO_2 Brayton Cycle for 388 MWe (1000 MWt) Sodium-Cooled Fast Reactor (SFR)

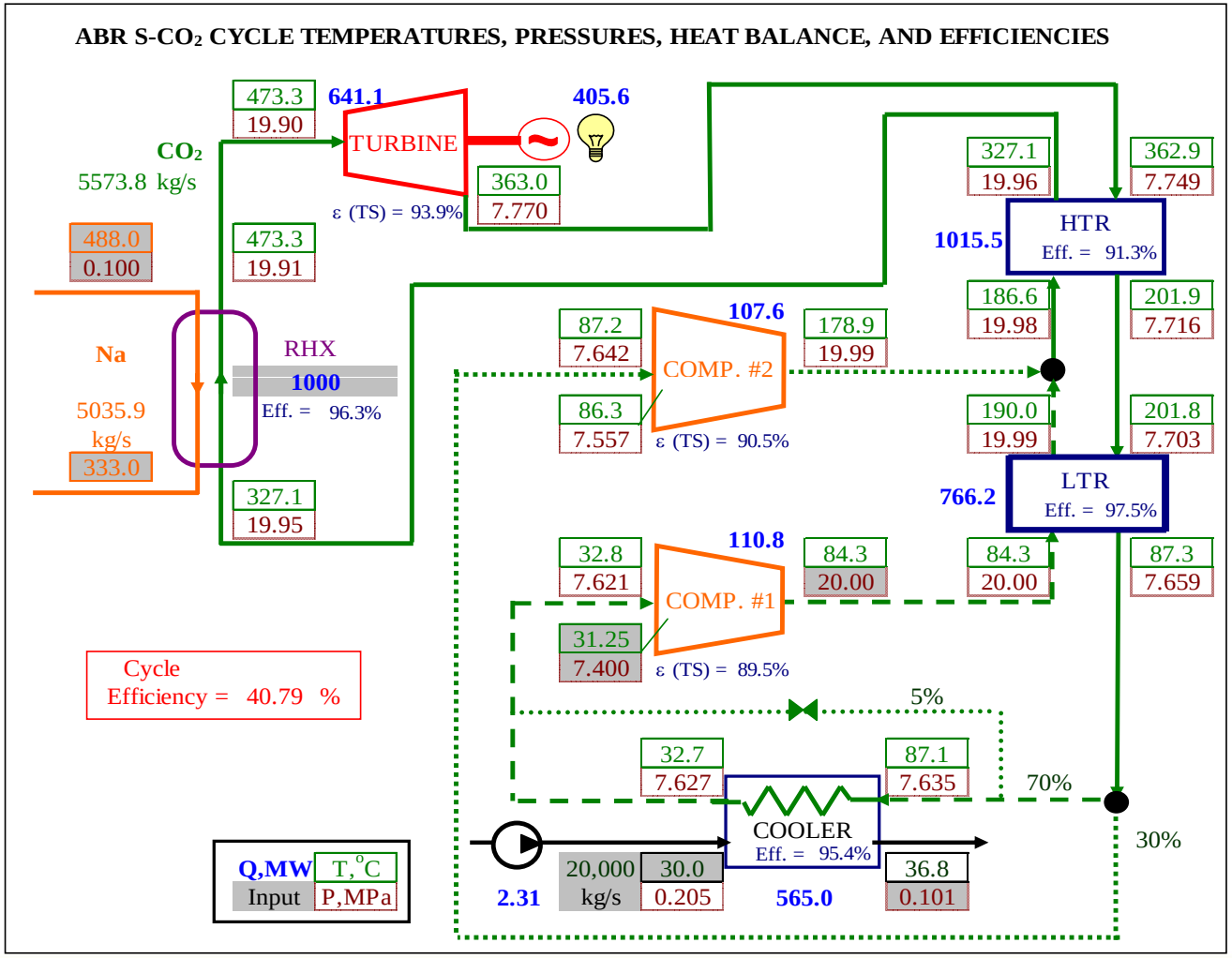

Extension of S-CO_2 Brayton Cycle to Very High Temperature Reactor (VHTR)

- Cascaded cycles for VHTR
- Cycle efficiencies: 54.2 % top; 49.7 % middle; 43.8 % bottom
- Net cycle efficiency = (54.2+49.7+43.8)/3 = 49.2 %, since heat duties of IHXs are equal
- Exceeds 47.7 % efficiency for direct He cycle
- Complexities
  - Overall plant control strategy must control three S-CO_2 cycles
  - Middle and bottom IHXs and other components must be designed for higher temperatures than for nominal middle and bottom cycle operation, in the event that heat removal in the upper IHX is lost

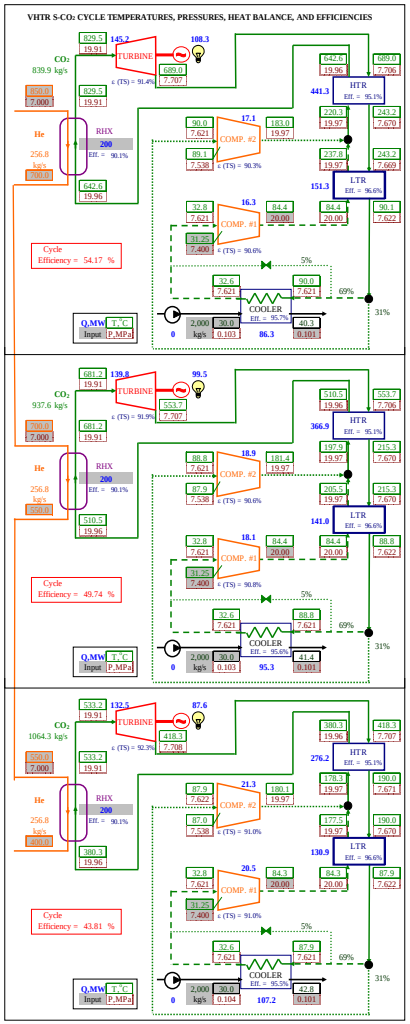

Benefits of S-CO_2 Brayton Cycle

- Improved safety and reduction of capital costs for Sodium-Cooled Fast Reactors (SFRs) by eliminating sodium-water reactions
  - Sodium reacts energetically with water releasing heat and generating combustible hydrogen gas
  - With Rankine water/steam cycle, designer must incorporate design features to accommodate potential sodium-water reactions following sodium-heated steam generator tube failure **(Increases plant cost)**
- Sodium and CO_2 also interact chemically and there is a need to understand those reactions under realistic conditions of potential Na-to-CO_2 heat exchanger failure
- Improved safety for Lead-Cooled Fast Reactors (LFRs) because molten Pb and CO_2 do not react chemically

Benefits of S-CO_2 Brayton Cycle

- Potential for lower capital cost than steam cycle
- Higher cycle efficiency than steam cycle for higher SFR core outlet temperatures (e.g., 45 % at 550 °C) further reducing plant cost per unit electrical power and increasing plant net present value
- Turbomachinery (turbine and two compressors) is remarkably small with expectation of significantly reduced component costs
  - Eliminates condenser, deaerator, feedwater pumps, and feedwater heaters of steam plant
- Compact energy converter size reducing turbine generator building size and cost

Benefits of S-CO_2 Brayton Cycle

- Efficiency versus turbine inlet temperature for SSTAR small LFR

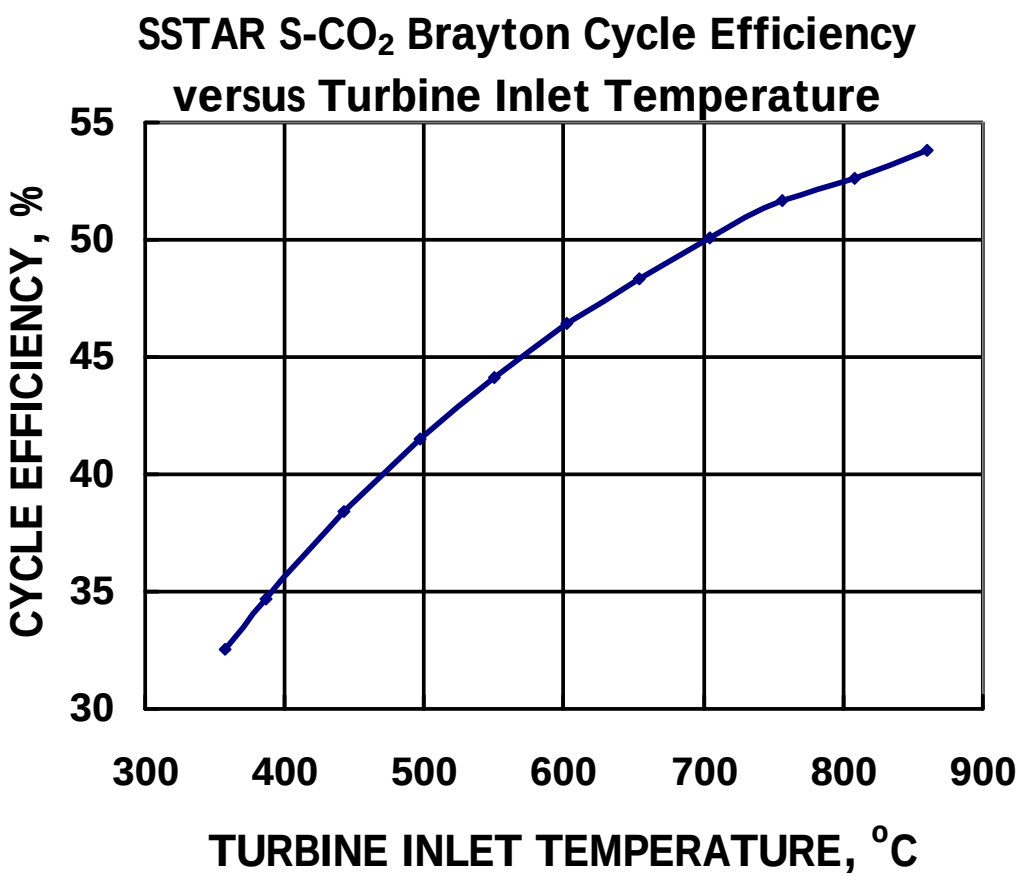

Current S-CO_2 Cycle R&D Status

- Sandia National Laboratories is carrying out a phased assembly of small-scale (~ 0.8 MWt heat input) S-CO_2 recompression Brayton cycle at Barber Nichols Inc. (BNI) in Arvada, Colorado to demonstrate viability and controllability of the S-CO_2 cycle
  - Supported by small-scale compressor loop operational since 2008 at BNI and now at SNL to address control and stability questions near the critical point and develop small-scale turbomachinery technology – There initially was question of whether one could even successfully operate a S-CO_2 compressor around the critical point
  - Have demonstrated that small-scale main compressor can be operated stably around the critical point covering full range of conditions of interest at critical point, on liquid side of the two-phase dome, on vapor side of two-phase dome, and inside dome
  - Confirmed that S-CO_2 system should be controllable and stable near the critical point

Current S-CO_2 Cycle R&D Status

- Development of S-CO_2 cycle at Argonne National Laboratory
  - Context of S-CO_2 Brayton cycle applications to specific small LFR and SFR concepts for which the S-CO_2 Brayton cycle is the reference power converter
  - Recent extension of S-CO_2 cycle to VHTR -Efficiency improvement
  - Developed a control strategy for S-CO_2 cycle enabling autonomous load following by small LFR
    - Thus far, have assumed that all turbomachinery is on a common shaft
    - Ongoing testing and refinement with Plant Dynamics Code applications
  - Developed the ANL Plant Dynamics Code from scratch, a new system level transient analysis capability that handles combination of S-CO_2 turbomachinery and strong CO_2 property variations in the vicinity of the critical point
    - Compressor modeling has been tested and compared versus data from small-scale compressor tests at BNI

Current S-CO_2 Cycle R&D Status

- Development of S-CO_2 cycle at Argonne National Laboratory
  - Performance testing of small-scale Heatric Division of Meggitt (UK) Ltd. Printed Circuit Heat Exchanger™ (PCHE™) unit under well controlled prototypical conditions varied over relevant regimes for cooler and low temperature recuperator
  - Developed a PCHE numerical heat transfer and pressure drop model for the ANL Plant Dynamics Code and validated the model through comparison with data from all ANL tests
  - Designing and assembling a new facility for testing new high temperature PCHE under high temperature recuperator conditions
  - Much work focused upon Na-to-CO_2 heat exchanger for SFR
    - Tests investigating plugging of sodium flow channels by precipitation of sodium oxide upon channel wall due to abnormally high level of dissolved oxygen in Na following postulated event
    - Tests on fundamental Na-CO_2 interactions under prototypical conditions

Heatric Compact Diffusion-Bonded Heat Exchangers

- Development of S-CO_2 cycle at ANL has envisioned use of compact diffusion-bonded heat exchangers manufactured by Heatric Division of Meggitt (UK) Ltd.
- Heat transfer from Na to S-CO_2 does not involve boiling as with steam cycle such that heat transfer can take place inside of compact diffusion-bonded heat exchangers (HXs)
- Unlike shell-and-tube heat exchangers, failures in compact diffusion-bonded heat exchangers, if they occur at all, are expected to be small cracks resulting in slow interaction of CO_2 with Na
  - **High reliability**
- Also selected because of lower volume and cost compared with shell-and-tube HXs

Heatric Printed Circuit Heat Exchanger™ (PCHE™)

- Micrograph of PCHE Core (Heatric)

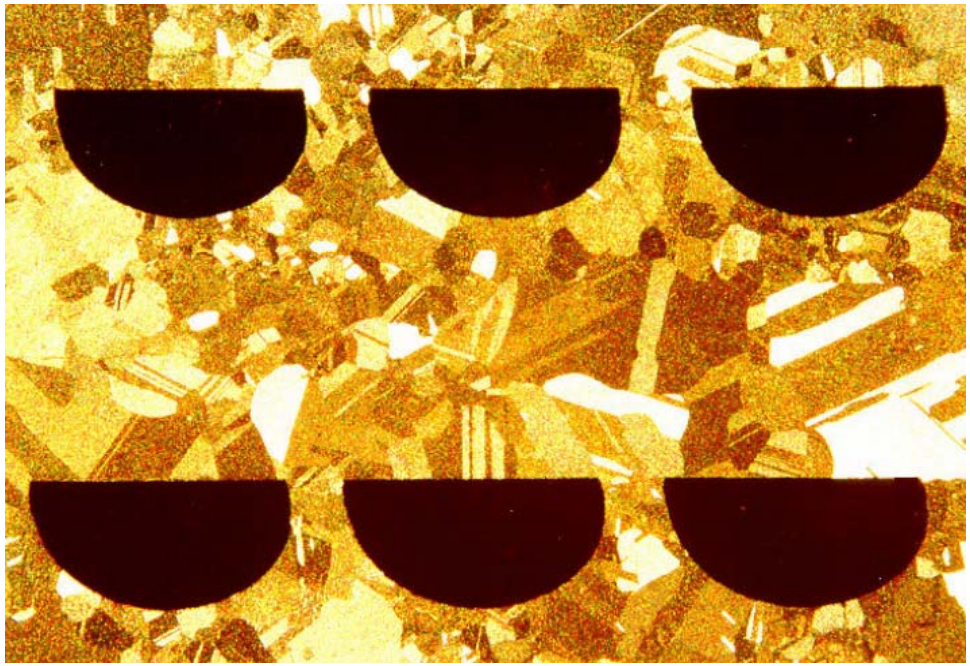

- Plate of Platelet PCHE (Heatric)

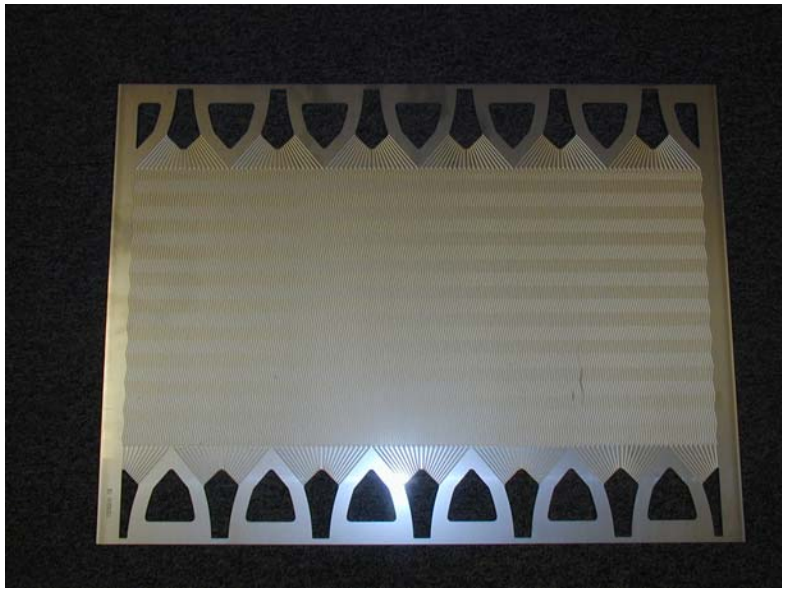

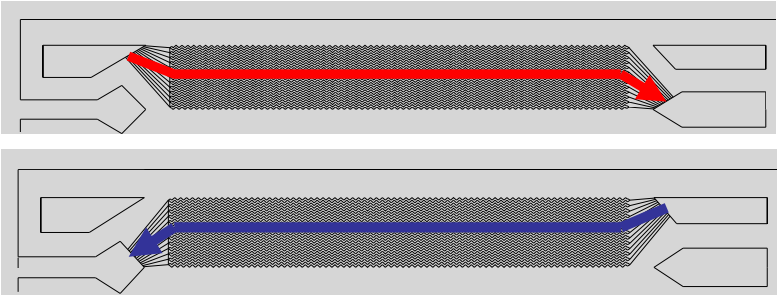

Hybrid Heat Exchanger Channel Configuration (Heatric Division of Meggitt (UK) Ltd.)

- Configuration suited for Na-to-CO_2 heat exchanger with larger Formed Plate Heat Exchanger (FPHE) channels on Na side and smaller Printed Circuit Heat Exchanger™ (PCHE™) channels on the CO_2 side

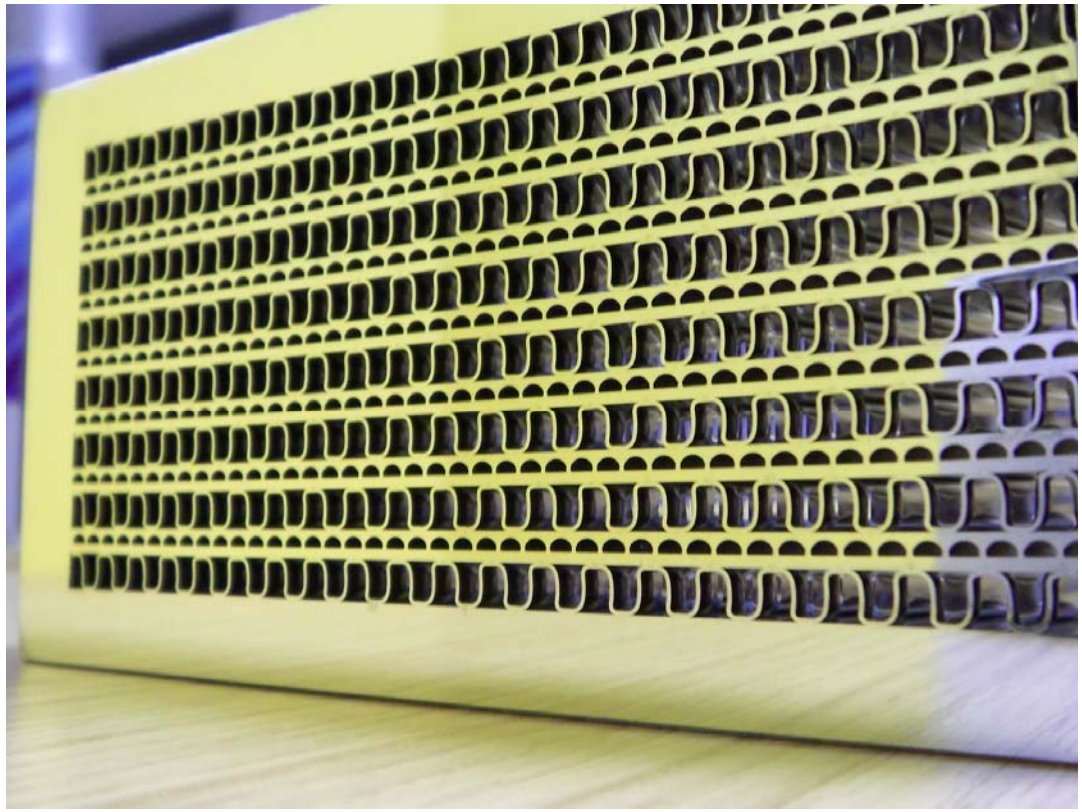

Heatric Formed Plate Heat Exchanger (FPHE)

- Stacking of shaped stainless steel plates

Existing NEUP Awards Relevant to S-CO_2 Brayton Cycle

- On May 20, 2010, DOE announced $ 38 M in awards for 42 university-led projects under DOE's Nuclear Energy University Program (NEUP)
- $ 475,005 awarded to Rensselaer Polytechnic Institute (RPI) for "Development and Validation of Multidimensional Models of Supercritical CO_2 Energy Conversion Systems for Nuclear Power Reactors" supporting Gen IV
- $ 651,447 awarded to University of Wisconsin, Madison (UW) for "Corrosion in Supercritical Carbon Dioxide: Materials, Environmental Purity, Surface Treatments, and Flow Issues" supporting Gen IV

Considerations for Advanced Energy Conversion Systems

- Advanced energy conversion system performance should exceed that of the current state of the art (i.e., Rankine superheated steam cycle)
- Main figure of merit is nuclear power plant cost per unit electrical power
  - Reduction could be realized through lower capital cost of power converter
  - Improvement in efficiency is important mainly because it can reduce the NPP cost per unit electrical power – A smaller and less costly reactor with a lower thermal power can provide the same electrical power reducing the cost per unit electrical power provided that the savings are not offset by a greater power converter capital cost
- Compatibility of working fluid with reactor coolant, reactor environment, and component materials are major considerations